kull DESIGN

Outdoor Wasserhahn Manufaktur
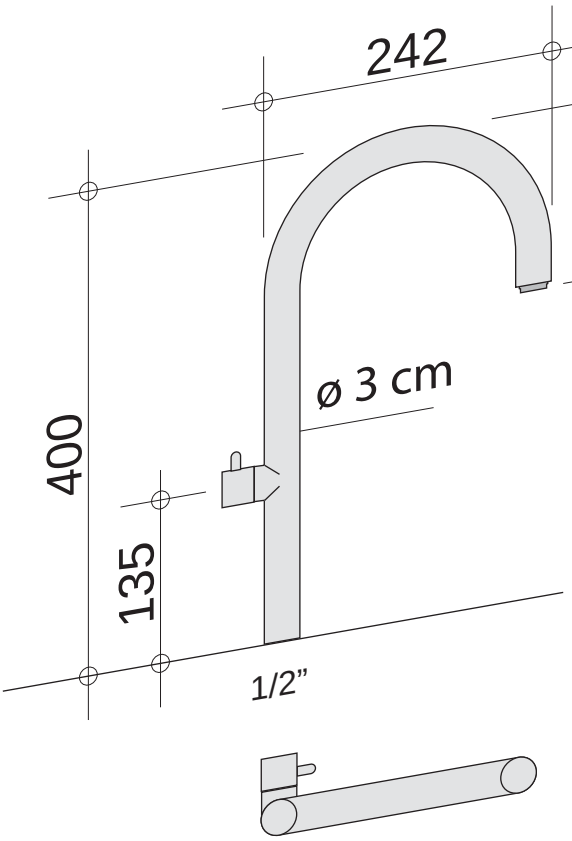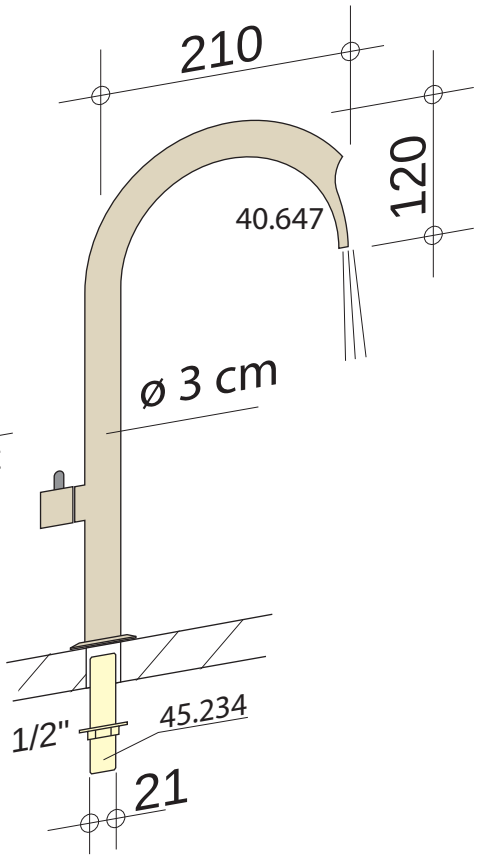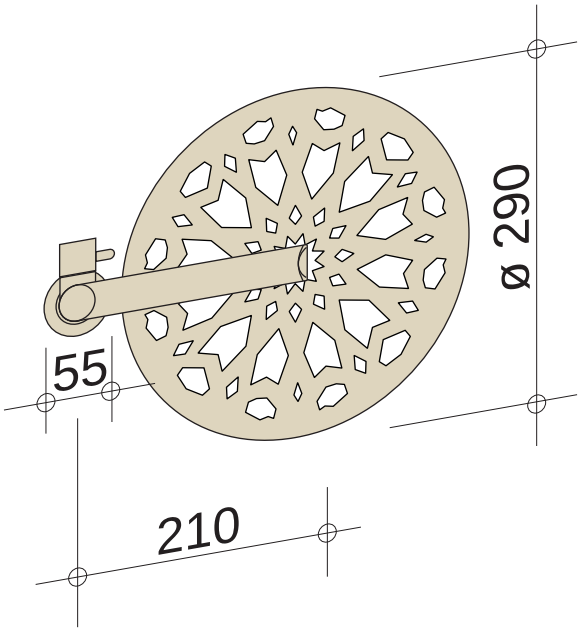
Stand-Wasserhahn
Art.-Nr: 40.398